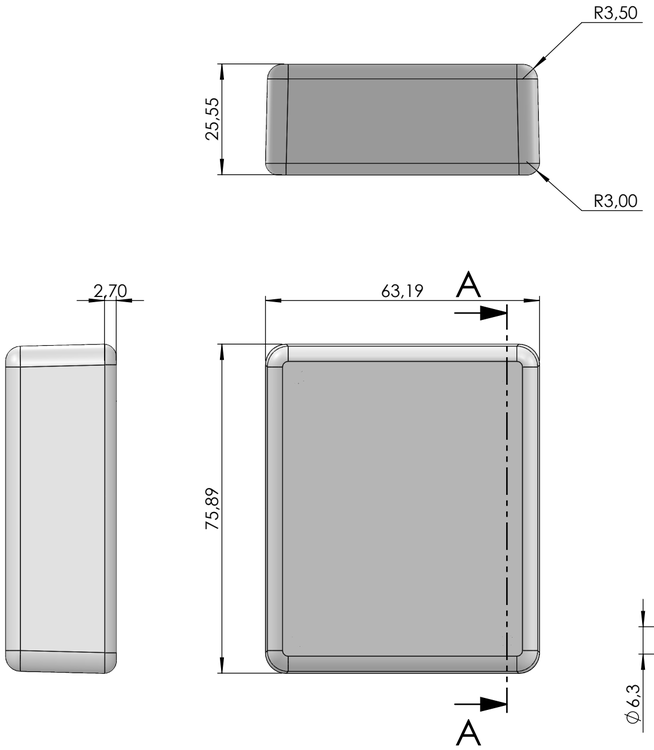

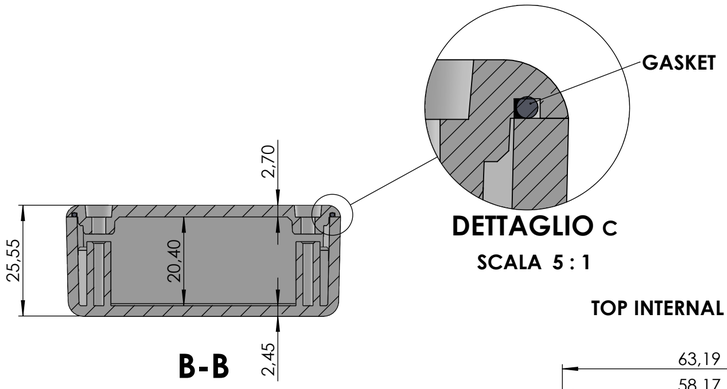

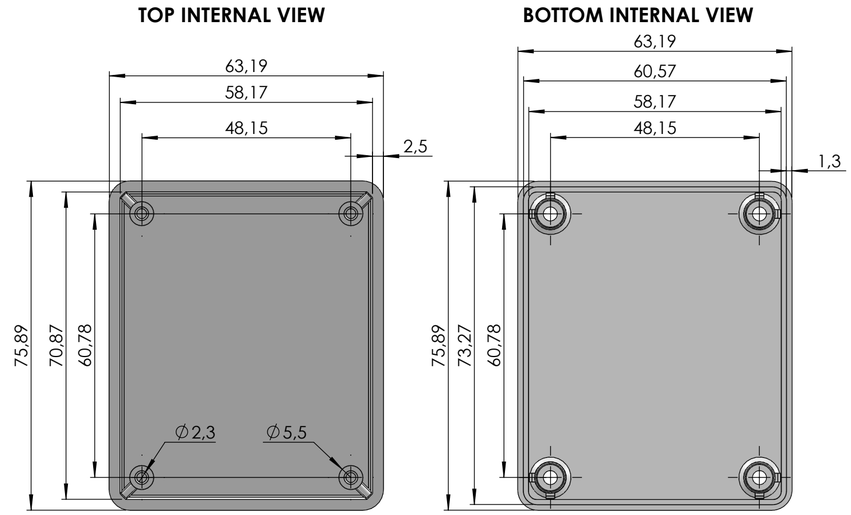

PCB MAX SIZE

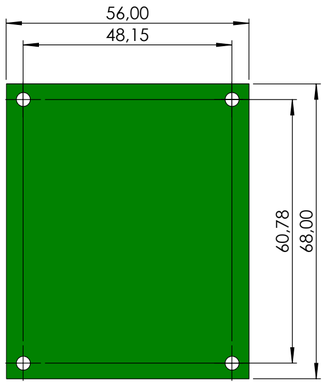

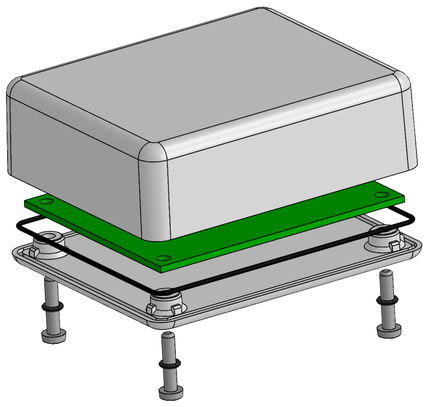

WHITE VERSION

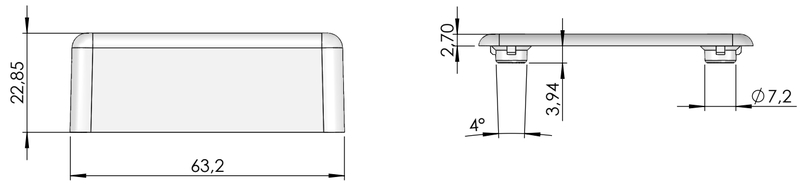

BLACK VERSION

Proprietary and Confidential	**TEKO S.p.A.** Via dell'Industria 5 - S.Lazzaro di Savena - BO - IT
TEKO ENCLOSURES	***Subject to technical modification without prior notice. Tipographical and others errors do not justify any claim for damages. All dimensions should be verified using an actual moulded part.***
	Part Number: SR22K · *Date:* 07/05/2025 · *Sheet:* **1 of 1** · *First angle prj.*
*This document contains proprietary information of **TEKO S.p.a.** and is tendered subject to the conditions that the information be retained in confidence not be reproducer or copied and not be used or incorporated in any product*	*Size:* **A2** · *Scale:* **1:1**